MATERIAL NUMBER	ENGINEERING NUMBER
1200710045	8A5006-31

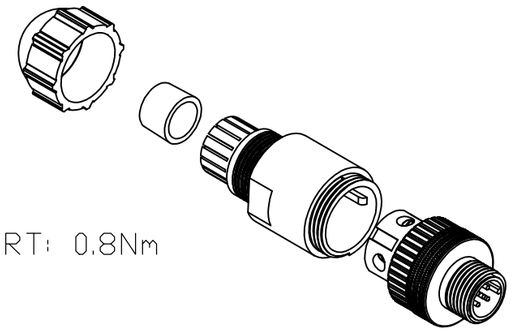

TORQUE RECOMMENDATION:

CABLE SCREW PG7: 2.4Nm
THREAD BETWEEN HOUSING AND INSERT: 0.8Nm
STRAND SCREW (CONTACT): 0.4Nm

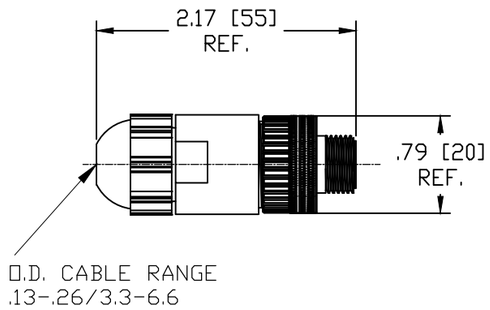

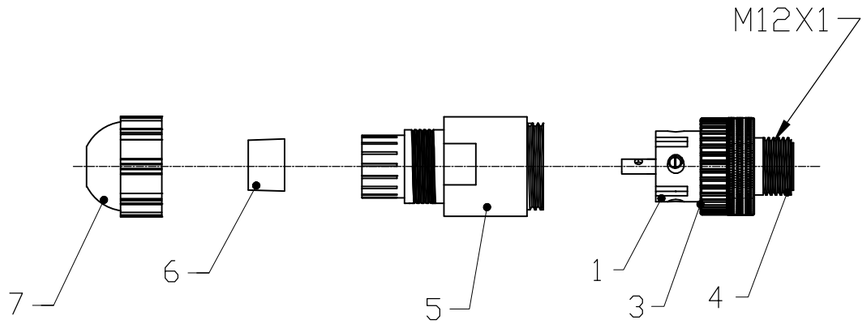

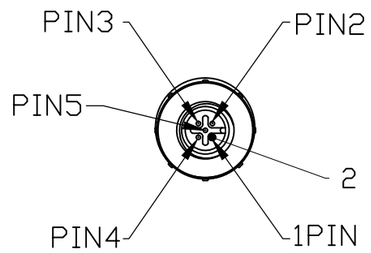

MALE FACE VIEW

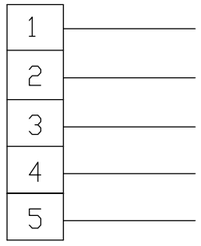

WIRING CHART

ITEM		COMPONENT	MATERIAL	FINISH
1	1	INSERT	POLYAMIDE	BLACK
2	5	CONTACTS	COPPER ALLOY	SILVER PLATED
3	1	O-RING	NITRILE	BLACK
4	1	COUPLING NUT	BRASS	NICKEL PLATED
5	1	MOLDED BODY	POLYAMIDE	BLACK
6	1	GROMMET	NITRILE	BLACK
7	1	CORD GRIP BODY	POLYAMIDE	BLACK

VOLTAGE RATING	30VAC/36VDC
AMPERAGE RATING	4 AMPS
PROTECTION	IP67
OPERATING TEMPERATURE	-25°C TO 90°C
CSA CERTIFICATIONS	CSA CERTIFIED, FILE NO. LR6837

DESCRIPTION
EC NO: IPG2013-1257 13.02.13
DRWN: REISSNER ---
CH'KD: APOHL ---
APPR: CBURGER ---
DESCRIPTION
REV
A1

QUALITY SYMBOLS
▼ = 0
Ⓒ = 0

GENERAL TOLERANCES (UNLESS SPECIFIED)

	mm	INCH
4 PLACES	±---	±---
3 PLACES	±---	±---
2 PLACES	±---	±---
1 PLACE	±0.3	±---
0 PLACE	±0.5	±---
ANGULAR ±	1 °	

DRAFT WHERE APPLICABLE MUST REMAIN WITHIN DIMENSIONS

DIMENSION STYLE: MM
SCALE: ---
DESIGN UNITS: METRIC
THIRD ANGLE PROJECTION

DRAWN BY: TWOLDEGE DATE: 2009/08/07
CHECKED BY: APOHL DATE: 2013/02/14
APPROVED BY: ---- DATE: ----

FA M12 5P AC MA STR UNSH
BK BRA
---

molex

MATERIAL NO.: 1200710045
DOCUMENT NO.: SD-120071-004
SHEET NO.: 1 OF 1
SIZE: A3

THIS DRAWING CONTAINS INFORMATION THAT IS PROPRIETARY TO MOLEX INCORPORATED AND SHOULD NOT BE USED WITHOUT WRITTEN PERMISSION